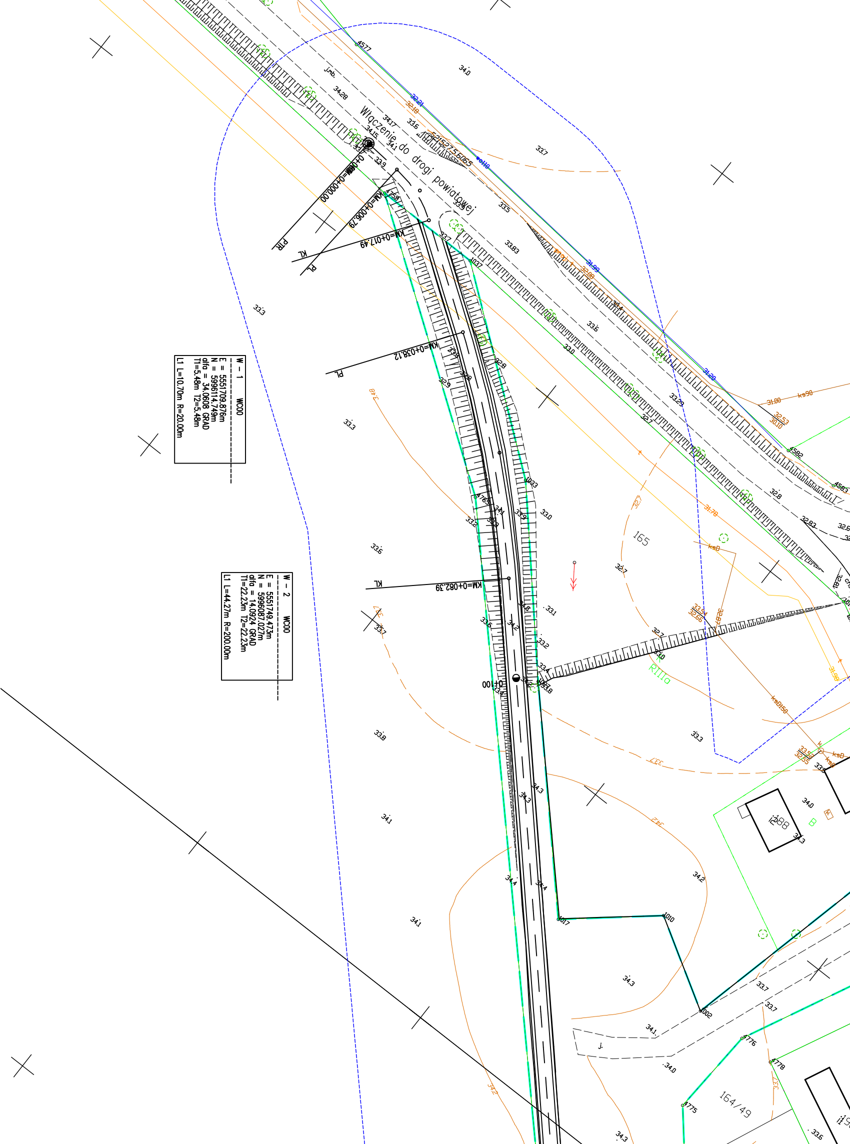
Włączenie do drogi powiatowej
KM=0+000.00
KM=0+006.79
KM=0+017.49
KM=0+038.12
KM=0+082.39
0+100
PTR
PL
KL
4577
4582
4583
1037
1033
4765
1010
1017
1002
4776
4778
4775
165
164/49
288
RIIIa
B
j.mb.
j.
ks90
ksD
ksD150
wo110
34.0
34.28
34.17
34.15
34.1
33.6
33.7
33.9
33.5
33.3
33.83
33.0
32.7
32.8
33.29
32.83
34.3
34.2
34.1
33.8
31.99
31.20
31.78
31.00
32.53
30.10
32.21
32.18

W – 1 WC00
E = 5551709.876m
N = 5996114.749m
alfa = 34.0608 GRAD
T1=5.48m T2=5.48m
L1 L=10.70m R=20.00m

W – 2 WC00
E = 5551749.473m
N = 5996087.027m
alfa = 14.0924 GRAD
T1=22.23m T2=22.23m
L1 L=44.27m R=200.00m

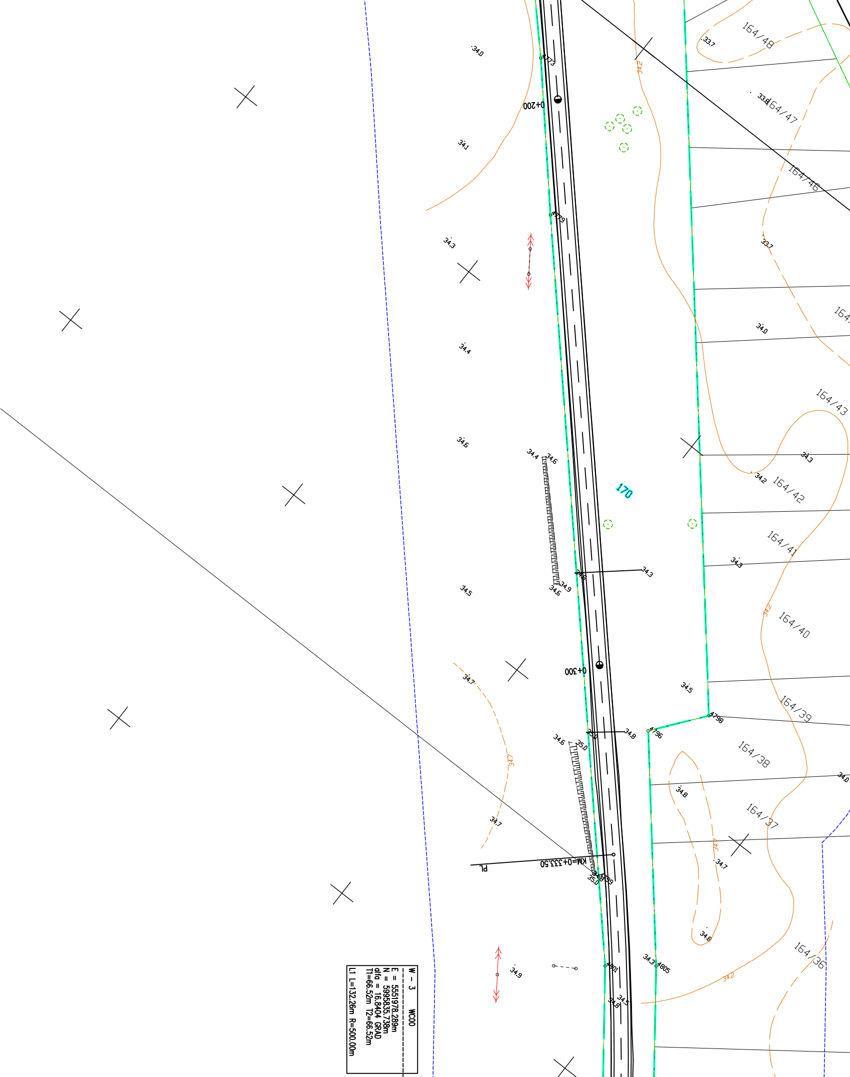
0+200
0+300
KM=0+333,50
PL
170
164/48
164/47
164/46
164/43
164/42
164/41
164/40
164/39
164/38
164/37
164/36
4773
4779
4796
4798
4801
4805
34.0
34.1
34.3
34.4
34.6
34.5
34.7
34.9
33.7
33.8
34.2
34.3
34.5
34.8
35.0
W - 3 WC00
E = 5551978.289m
N = 5995835.738m
alfa = 16.8404 GRAD
T1=66.52m T2=66.52m
L1 L=132.26m R=500.00m

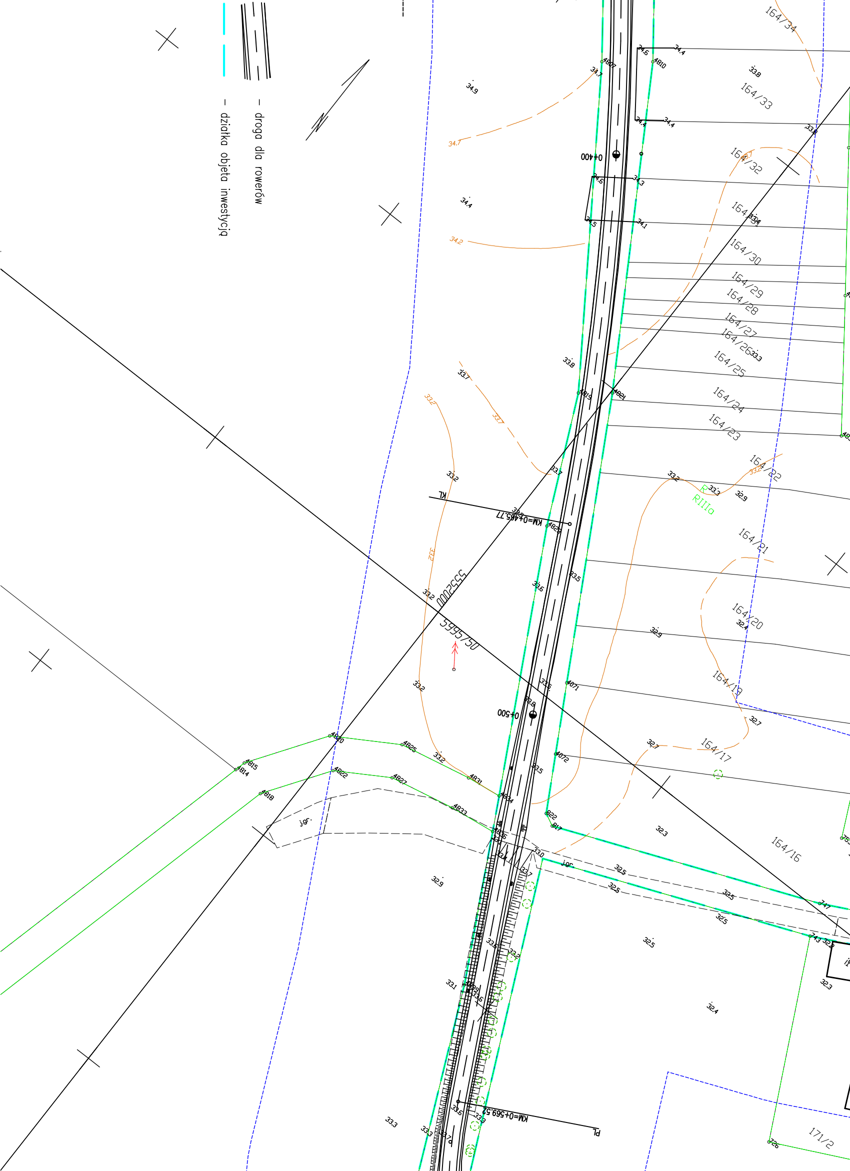

– droga dla rowerów
– działka objęta inwestycją
164/34
164/33
164/32
164/31
164/30
164/29
164/28
164/27
164/26
164/25
164/24
164/23
164/22
164/21
164/20
164/19
164/17
164/16
171/2
R
RIIIa
0+400
0+500
KL
KM=0+465,77
PL
KM=0+569,52
5595750
5552000
j.gr.
4807
4810
4821
4815
4828
4871
4872
4820
4825
4831
4834
4833
4822
4827
4818
4814
34.9
34.7
34.4
34.2
33.8
33.7
33.2
33.5
33.6
33.3
32.9
32.7
32.5
32.4
32.3
33.1
33.0
32.8

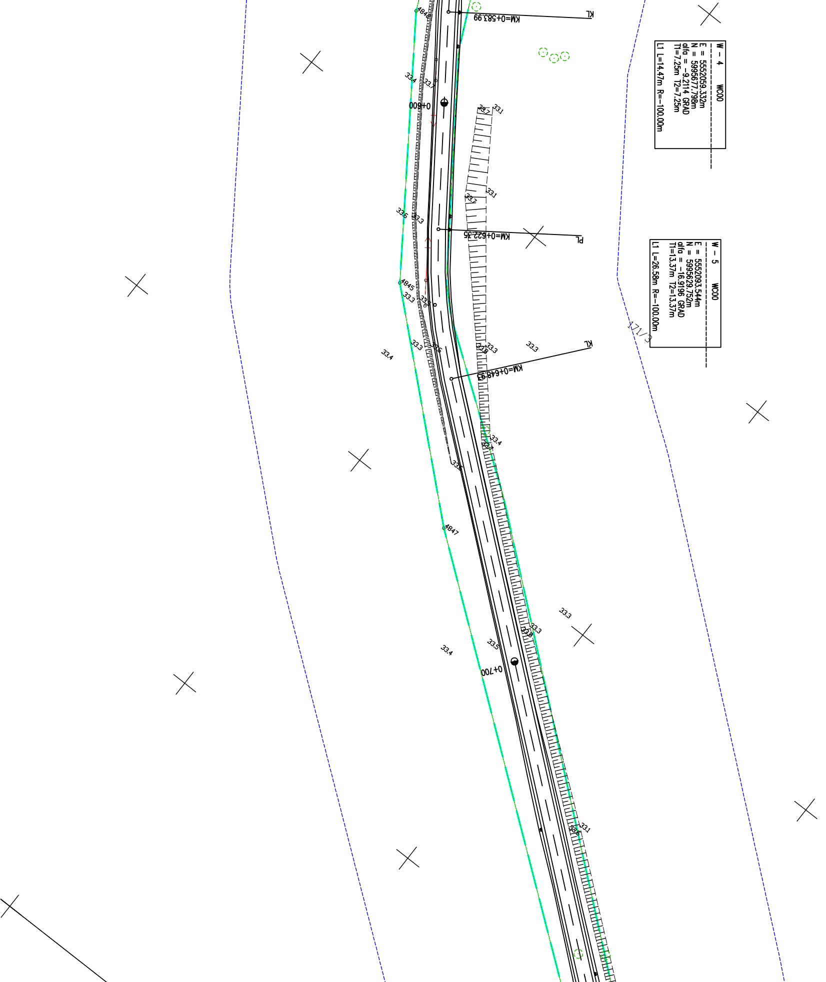
KL
KM=0+583.99
PL
KM=0+622.35
KL
KM=0+648.93
0+600
0+700
W - 4 WC00
E = 5552059.332m
N = 5995677.798m
alfa = -9.2114 GRAD
T1=7.25m T2=7.25m
L1 L=14.47m R=-100.00m
W - 5 WC00
E = 5552093.544m
N = 5995629.752m
alfa = -16.9196 GRAD
T1=13.37m T2=13.37m
L1 L=26.58m R=-100.00m
171/3
4845
4847
33.4
33.7
33.1
33.6
33.3
33.5
33.4
33.3
33.5
33.3
33.4
33.5
33.1

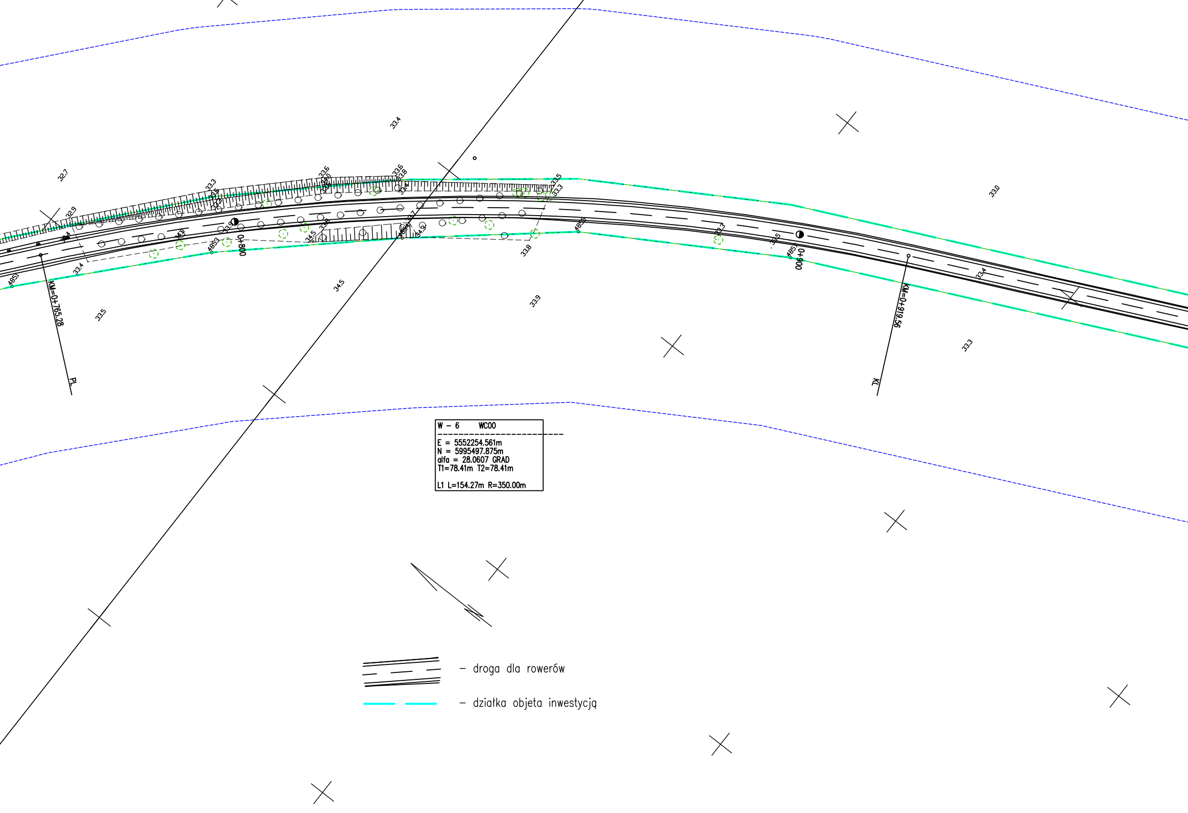
KM=0+765.28
PL
0+800
0+900
KM=0+919.56
KL
4851
4853
4854
4855
4857
32.7
32.9
33.4
33.5
33.3
33.6
34.0
33.6
33.8
33.4
33.7
34.5
34.5
33.8
33.9
33.5
33.3
33.4
33.3
33.5
33.0
33.4
33.3
W – 6 WC00
E = 5552254.561m
N = 5995497.875m
alfa = 28.0607 GRAD
T1=78.41m T2=78.41m
L1 L=154.27m R=350.00m
– droga dla rowerów
– działka objęta inwestycją

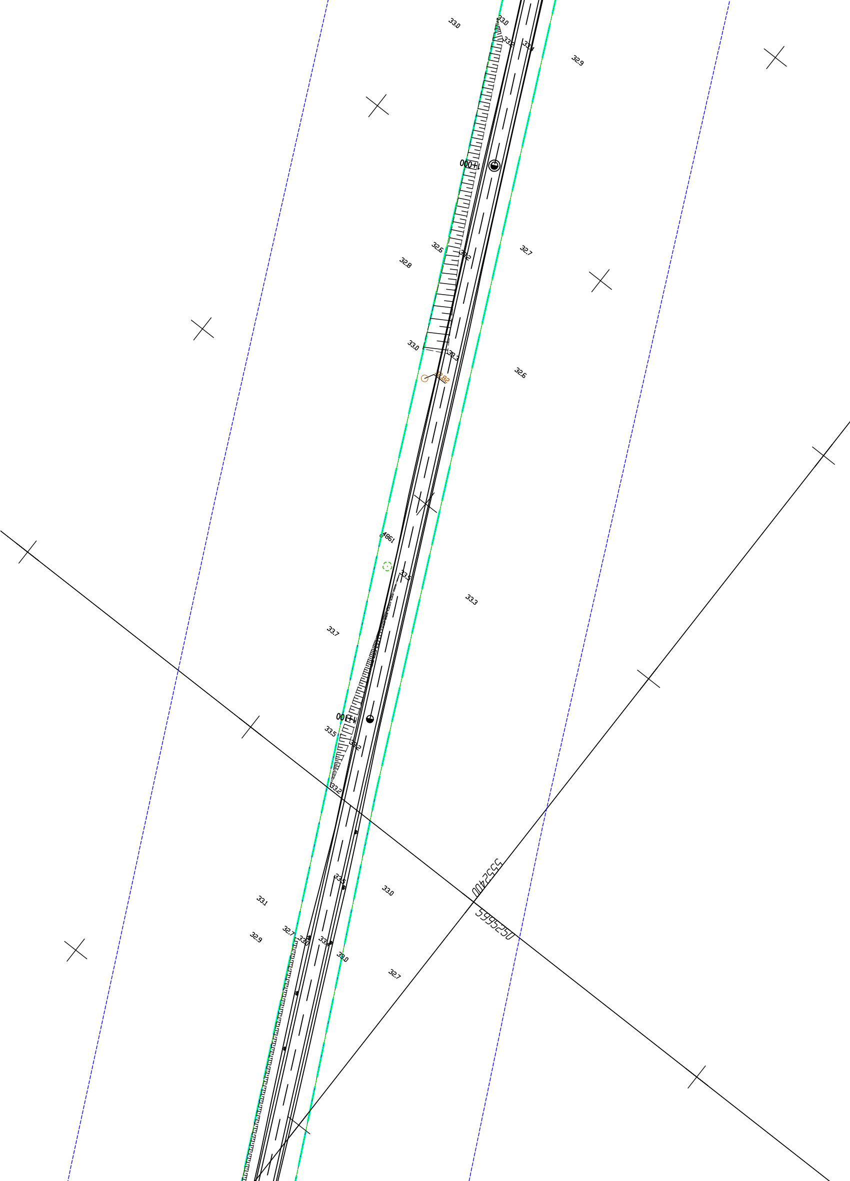
33.0
33.0
33.2
33.4
32.9
1+000
32.6
33.2
32.8
32.7
33.0
33.3
32.82
32.6
4861
33.5
33.3
33.7
1+100
33.5
33.2
33.2
33.5
33.0
555400
5595250
33.1
32.9
32.7
33.0
33.0
33.0
32.7

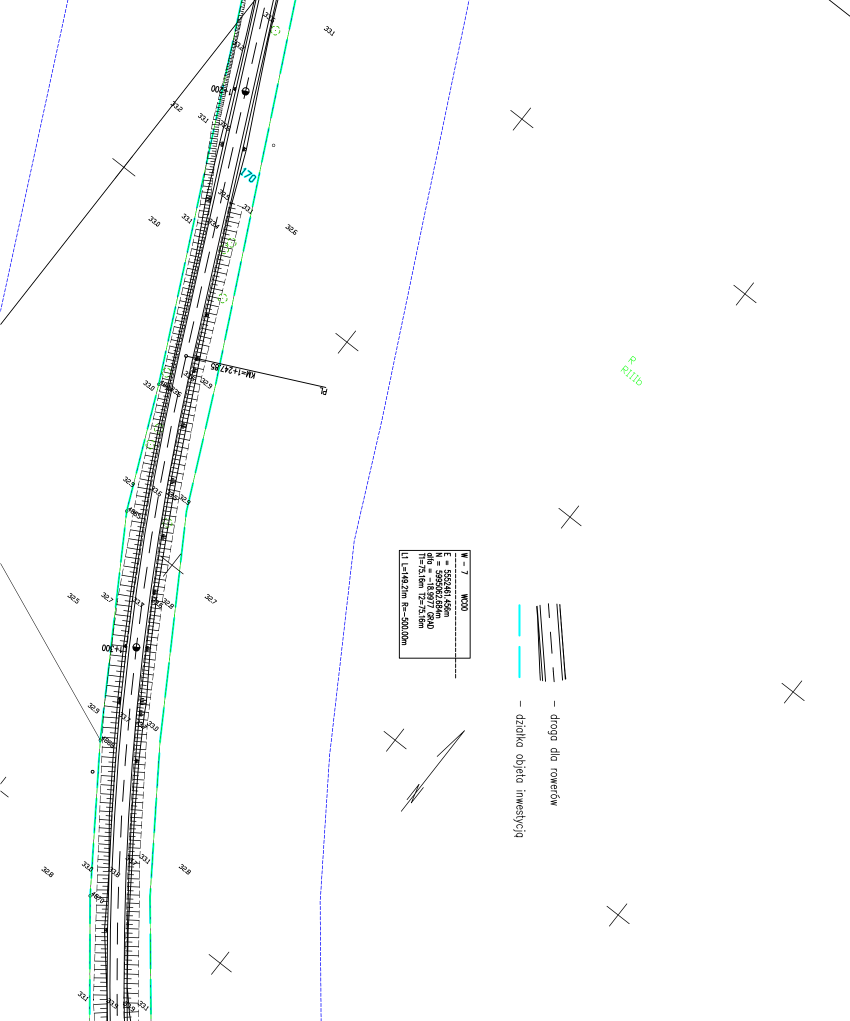

1+200
170
KM=1+247.85
PL
1+300
R
RIIIb
W - 7 WC00
E = 5552461.456m
N = 5995062.684m
alfa = -18.9977 GRAD
T1=75.16m T2=75.16m
L1 L=149.21m R=-500.00m
- droga dla rowerów
- działka objęta inwestycją
4865
4866
4870
33.1
33.2
33.0
32.6
32.9
32.7
32.5
32.8
33.5
33.4
33.7
33.8

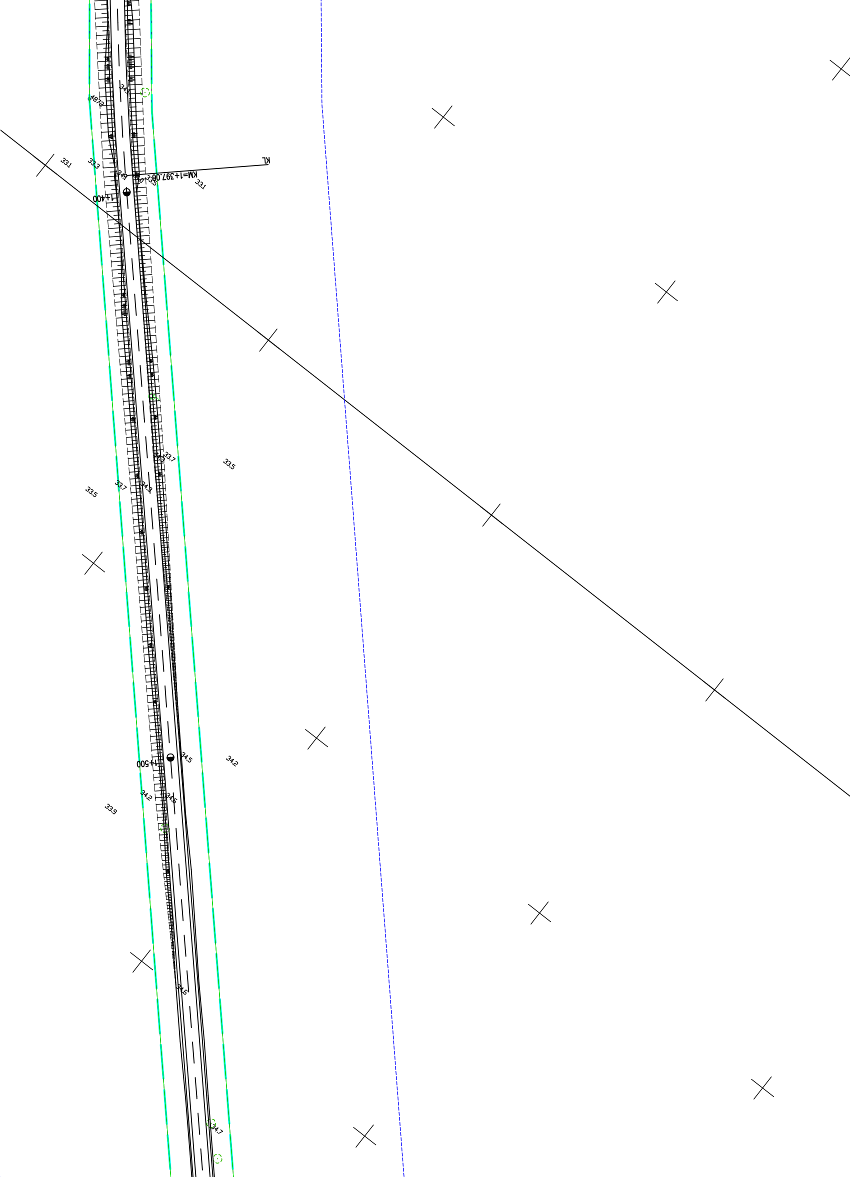
4872
34.1
33.1
33.3
34.9
KM=1+397.06
33.5
33.1
KL
1+400
33.7
34.3
33.5
33.7
34.3
33.5
34.5
34.2
1+500
34.2
34.5
33.9
34.6
34.7

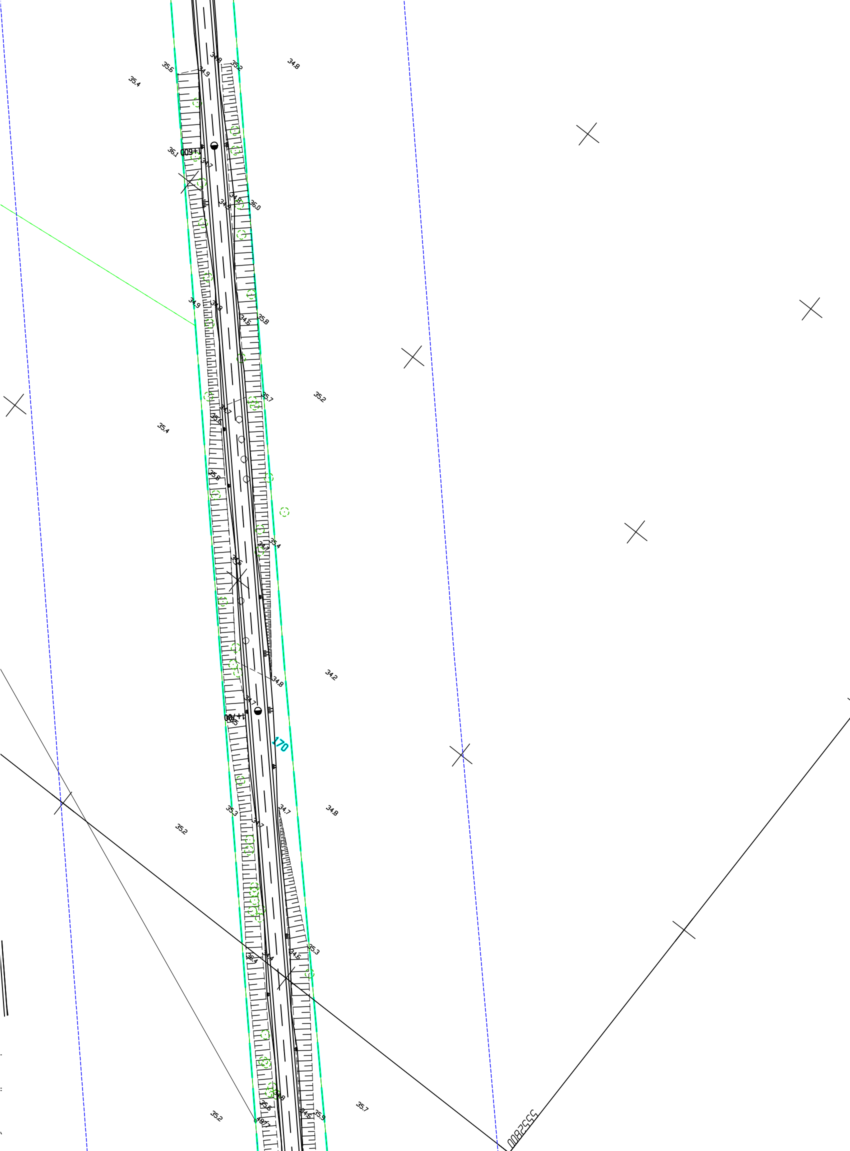
35.6
35.4
34.9
34.8
35.2
34.8
36.1
1+600
34.7
34.8
34.5
36.0
34.9
34.9
34.6
35.8
35.7
35.2
35.4
34.7
35.6
35.8
35.4
34.7
34.6
34.2
34.8
34.7
1+700
34.5
170
35.3
34.7
34.7
34.8
35.2
35.3
34.4
34.6
35.4
35.6
34.8
34.6
35.9
35.7
35.2
4877
5552800

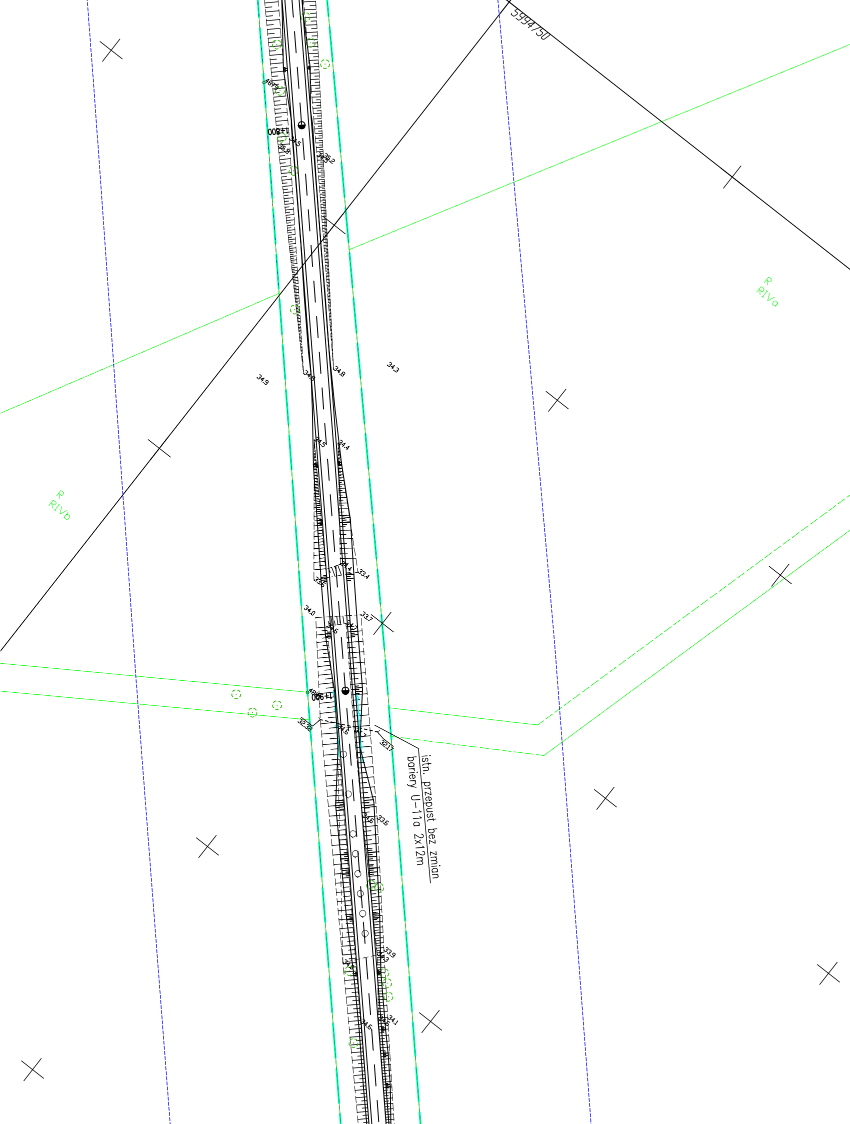
5994750
R
RIVa
R
RIVb
4879
1+800
34.5
35.5
35.2
34.9
34.3
34.9
34.8
34.5
34.4
34.4
33.4
33.5
34.0
33.7
34.6
4886
1+900
32.32
34.6
32.17
istn. przepust bez zmian
bariery U-11a 2x12m
33.6
33.9
34.3
34.1
34.5

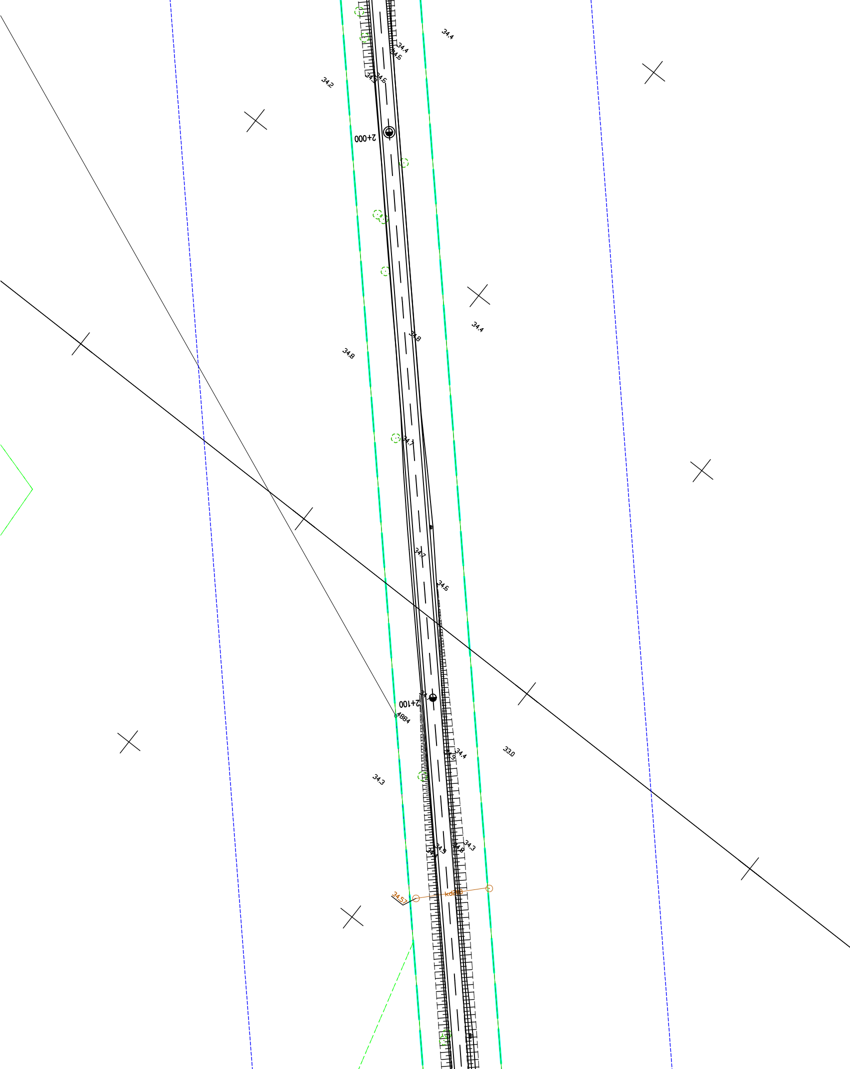
34.4
34.4
34.6
34.2
34.5
34.6
2+000
34.4
34.8
34.8
34.7
34.7
34.6
34.
2+100
4884
34.4
34.9
33.0
34.3
34.3
34.9
34.4
34.8
34.57
kd218

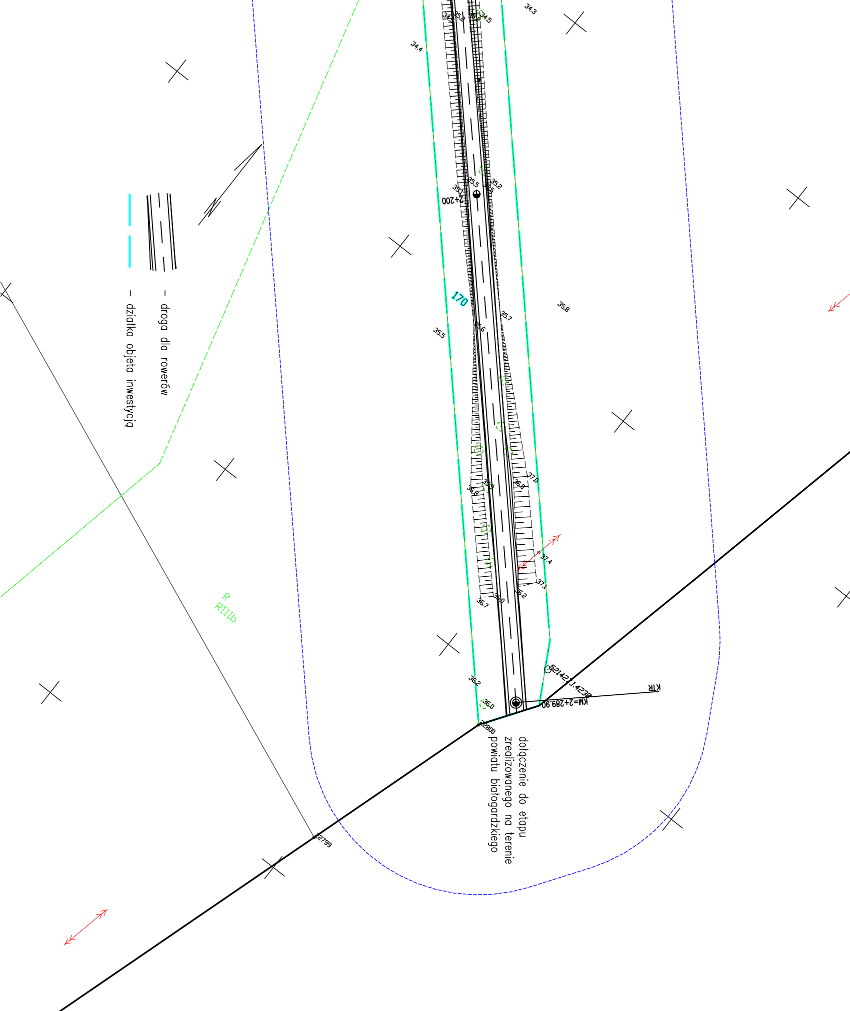
– droga dla rowerów
– działka objeta inwestycją
dołączenie do etapu zrealizowanego na terenie powiatu białogardzkiego
2+200
KM=2+289.90
KTR
5214271.4238
170
R
RIIIb
22800
22799
34.3
34.4
34.5
35.2
35.5
35.6
35.7
35.8
36.0
36.2
36.7
36.8
37.0
37.1
37.4